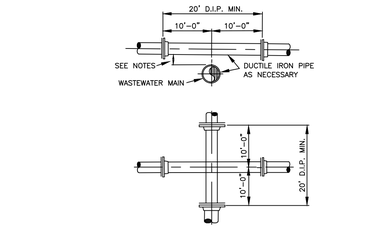

NOTES:

1. STORM SEWER, GRAVITY WASTEWATER AND RECLAIMED WATER MAIN CROSSING UNDER POTABLE WATER MAINS SHALL BE LAID TO PROVIDE A MINIMUM VERTICAL DISTANCE OF TWELVE (12) INCHES BETWEEN THE INVERT OF THE UPPER PIPE AND THE CROWN OF THE LOWER PIPE. WHERE THIS MINIMUM SEPARATION CANNOT BE MAINTAINED, THE CROSSING SHALL BE ARRANGED SO THAT THE STORM/WASTEWATER/RECLAIMED WATER PIPE JOINTS AND POTABLE WATER MAIN JOINTS ARE EQUIDISTANT FROM THE POINT OF CROSSING WITH NO LESS THAN TEN (10) FEET BETWEEN ANY TWO JOINTS, BOTH PIPES SHALL BE D.I.P., AND THE MINIMUM VERTICAL SEPARATION SHALL BE 6 INCHES. WHERE THERE IS NO ALTERNATIVE TO STORM/WASTEWATER/RECLAIMED WATER PIPES CROSSING OVER A POTABLE WATER MAIN, THE CRITERIA FOR MINIMUM 12" VERTICAL SEPARATION BETWEEN LINES AND JOINT ARRANGEMENT, AS STATED ABOVE, SHALL BE REQUIRED, AND BOTH PIPES SHALL BE D.I.P. IRRESPECTIVE OF SEPARATION. D.I.P. IS NOT REQUIRED FOR STORM SEWERS.
2. WHENEVER POSSIBLE MAINTAIN MIN. TEN (10) FEET HORIZONTAL DISTANCE (WALL TO WALL) BETWEEN POTABLE WATER MAIN AND STORM SEWER, WASTEWATER MAIN, OR FORCE MAIN (A MIN. 6" SEPARATION MAY BE APPROVED ON A CASE BY CASE BASIS). MAINTAIN MIN. THREE (3) FEET HORIZONTAL DISTANCE (WALL TO WALL) BETWEEN RECLAIMED WATER MAIN AND POTABLE WATER MAIN, STORM SEWER, WASTEWATER GRAVITY MAIN OR FORCE MAIN.
3. FORCE MAIN CROSSING POTABLE WATER MAIN OR RECLAIMED WATER MAIN SHALL BE LAID TO PROVIDE A MINIMUM VERTICAL DISTANCE OF TWELVE (12) INCHES BETWEEN THE OUTSIDE OF THE FORCE MAIN AND OUTSIDE OF THE POTABLE WATER MAIN OR RECLAIMED WATER MAIN WITH THE POTABLE WATER MAIN OR RECLAIMED WATER MAIN CROSSING OVER THE FORCE MAIN.
4. WASTEWATER LATERALS SHALL CROSS UNDER POTABLE WATER MAINS WITH A MIN. 12" VERTICAL SEPARATION WHENEVER POSSIBLE. WHERE THIS MINIMUM SEPARATION CANNOT BE MAINTAINED, A 20' SECTION OF DUCTILE IRON PIPE POTABLE WATER MAIN CENTERED ON THE CROSSING IS REQUIRED AND THE MINIMUM VERTICAL SEPARATION SHALL BE 6". WHERE THERE IS NO ALTERNATIVE TO A WASTEWATER LATERAL PIPE CROSSING OVER A POTABLE WATER MAIN, A MINIMUM 12" VERTICAL SEPARATION IS REQUIRED, THE LATERAL SHALL BE P.V.C. C-900 SDR18 OR BETTER, THE POTABLE WATER MAIN SHALL BE D.I.P. AND THE PIPE JOINTS SHALL BE EQUIDISTANT FROM THE POINT OF CROSSING.
5. POTABLE WATER SERVICE LINES SHALL CROSS OVER WASTEWATER MAINS WITH MIN. 12" VERTICAL SEPARATION. WHERE THIS MIN. SEPARATION CAN NOT BE MAINTAINED, THE WATER SERVICE SHALL BE ENCASED IN A MIN. 10' LONG CASING CENTERED OVER THE CROSSING WITH MIN. 6" VERTICAL SEPARATION.
6. WASTEWATER MAINS, WATER MAINS, STORM PIPES AND OTHER UTILITY PIPES SHALL CROSS PERPENDICULAR WHENEVER POSSIBLE.

RECLAIMED WATER, POTABLE WATER, WASTEWATER MAIN AND STORM SEWER CONFLICT

10R

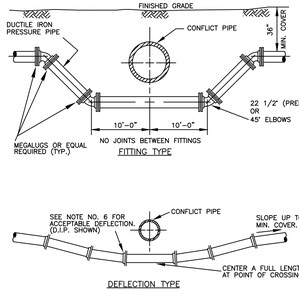

NOTES:

1. STORM SEWER, GRAVITY WASTEWATER AND RECLAIMED WATER MAIN CROSSING UNDER POTABLE WATER MAINS SHALL BE LAID TO PROVIDE A MINIMUM VERTICAL DISTANCE OF TWELVE (12) INCHES BETWEEN THE INVERT OF THE UPPER PIPE AND THE CROWN OF THE LOWER PIPE. WHERE THIS MINIMUM SEPARATION CANNOT BE MAINTAINED, THE CROSSING SHALL BE ARRANGED SO THAT THE STORM/WASTEWATER/RECLAIMED WATER PIPE JOINTS AND POTABLE WATER MAIN JOINTS ARE EQUIDISTANT FROM THE POINT OF CROSSING WITH NO LESS THAN TEN (10) FEET BETWEEN ANY TWO JOINTS, BOTH PIPES SHALL BE D.I.P., AND THE MINIMUM VERTICAL SEPARATION SHALL BE 6 INCHES. WHERE THERE IS NO ALTERNATIVE TO STORM/WASTEWATER/RECLAIMED WATER PIPES CROSSING OVER A POTABLE WATER MAIN, THE CRITERIA FOR MINIMUM 12" VERTICAL SEPARATION BETWEEN LINES AND JOINT ARRANGEMENT, AS STATED ABOVE, SHALL BE REQUIRED, AND BOTH PIPES SHALL BE D.I.P. IRRESPECTIVE OF SEPARATION. D.I.P. IS NOT REQUIRED FOR STORM SEWERS.
2. WHENEVER POSSIBLE MAINTAIN MIN. TEN (10) FEET HORIZONTAL DISTANCE (WALL TO WALL) BETWEEN POTABLE WATER MAIN AND STORM SEWER, WASTEWATER MAIN, OR FORCE MAIN (A MIN. 6" SEPARATION MAY BE APPROVED ON A CASE BY CASE BASIS.) MAINTAIN MIN. THREE (3) FEET HORIZONTAL DISTANCE (WALL TO WALL) BETWEEN RECLAIMED WATER MAIN AND POTABLE WATER MAIN, STORM SEWER, WASTEWATER GRAVITY MAIN OR FORCE MAIN.
3. FORCE MAIN CROSSING POTABLE WATER MAIN OR RECLAIMED WATER MAIN SHALL BE LAID TO PROVIDE A MINIMUM VERTICAL DISTANCE OF TWELVE (12) INCHES BETWEEN THE OUTSIDE OF THE FORCE MAIN AND OUTSIDE OF THE POTABLE WATER MAIN OR RECLAIMED WATER MAIN WITH THE POTABLE WATER MAIN OR RECLAIMED WATER MAIN CROSSING OVER THE FORCE MAIN.
4. FITTINGS SHALL BE RESTRAINED.
5. THE DEFLECTION TYPE CROSSING IS PREFERRED.
6. DO NOT EXCEED 75% OF MANUFACTURERS RECOMMENDED MAXIMUM JOINT DEFLECTION FOR DUCTILE IRON PIPE. PVC PIPE CURVATURE MAY ONLY BE ACCOMPLISHED BY INSTALLING APPROPRIATE BENDS.
7. ALL EXPOSED TIE STEEL SHALL BE COATED WITH COAL-TAR EPOXY.
8. POTABLE WATER SERVICE LINES SHALL CROSS OVER WASTEWATER MAINS WITH MIN. 12" VERTICAL SEPARATION. WHERE THIS MIN. SEPARATION CAN NOT BE MAINTAINED, THE WATER SERVICE SHALL BE ENCASED IN A MIN. 10' LONG CASING CENTERED OVER THE CROSSING WITH MIN. 6" VERTICAL SEPARATION.
9. WASTEWATER MAINS, WATER MAINS, STORM PIPES AND OTHER UTILITY PIPES SHALL CROSS PERPENDICULAR WHENEVER POSSIBLE.

RECLAIMED WATER MAIN PRESSURE PIPE CONFLICT

11R

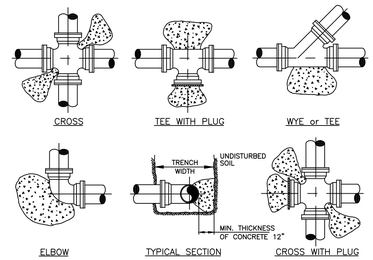

PIPE	THRUST BLOCK AREA REQ'D	REMARKS	NOTE: FOR OTHER FITTINGS USE THE FOLLOWING FACTORS.
4"	2.0 SQ. FT.	VALUES ARE FOR 90° BEND, BASED ON 2000 P.S.F. SAFE BEARING LOAD AND PIPE PRESSURE OF 150 P.S.I. FOR OTHER SOILS & PRESSURES THE AREA REQUIRED IS IN DIRECT PROPORTION	TEE 100% 45° BEND 71% 22 1/2° BEND 39% 11 1/4° BEND 20% DEAD END 100%
6"	4.0 SQ. FT.		
8"	6.6 SQ. FT.		
10"	10.0 SQ. FT.		
12"	14.0 SQ. FT.		
14"	18.6 SQ. FT.		

NOTES:

1. CONCRETE THRUST BLOCKS OR THRUST COLLARS MAY BE UTILIZED ONLY IF NECESSARY FOR CONNECTIONS TO AN EXISTING PIPING SYSTEM, OTHERWISE MECHANICAL RESTRAINTS SHALL BE USED. KEEP "T" BOLTS CLEAR OF CONCRETE, WRAPPED IN VISQUEEN FOR FUTURE ACCESS, WITH A MINIMUM OF 1' THICKNESS BETWEEN THE FITTING AND SOIL.
2. BEFORE POURING CONCRETE, PLUGS SHALL BE WRAPPED WITH VISQUEEN AND A BOARD PLACED IN FRONT.
3. CONCRETE SHALL BE 2500 P.S.I. MINIMUM.
4. THE ENGINEER OF RECORD SHALL SUBMIT A THRUST BLOCK SIZE CALCULATION FOR TEE CONNECTIONS INTO UNRESTRAINED EXISTING MAINS LARGER THAN 14".
5. THE ENGINEER OF RECORD SHALL SUBMIT A PIPE RESTRAINT DESIGN FOR INLINE EXTENSIONS OF A EXISTING UNRESTRAINED MAIN IF MECHANICAL JOINT RESTRAINT CAN NOT BE INSTALLED ON THE EXISTING MAIN.

TYPICAL THRUST BLOCKS FOR PRESSURE PIPE

12R

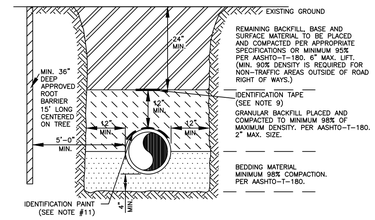

NOTES:

1. BEDDING SHALL CONSIST OF IN-SITU GRANULAR MATERIAL OR WASHED AND GRADED LIMEROCK 3/8"- 7/8" SIZING. UNSUITABLE IN-SITU MATERIALS SUCH AS MUCK, DEBRIS AND LARGER ROCKS SHALL BE REMOVED.
2. THE PIPE SHALL BE FULLY SUPPORTED FOR ITS ENTIRE LENGTH WITH APPROPRIATE COMPACTION UNDER THE PIPE HAUNCHES.
3. THE PIPE SHALL BE PLACED IN A DRY TRENCH.
4. BACKFILL SHALL BE FREE OF UNSUITABLE MATERIAL SUCH AS LARGE ROCK, MUCK AND DEBRIS.
5. DENSITY TESTS ARE REQUIRED IN 1 FOOT LIFTS ABOVE THE PIPE AT INTERVALS OF 400' MAXIMUM, MINIMUM 1 SET OF TESTS FOR EACH WASTEWATER GRAVITY MAIN RUN, OR AS DIRECTED BY THE INSPECTOR.
6. THE DEVELOPER/CONTRACTOR SHALL BE RESPONSIBLE TO COMPLY WITH ALL TRENCH SAFETY LAWS AND REGULATIONS.
7. SEE SEPARATE DETAILS FOR "PIPE INSTALLATION UNDER EXISTING PAVEMENT - OPEN CUT."
8. THE AFFECTED AREA SHALL BE RESTORED TO EQUAL OR BETTER CONDITION OR AS SPECIFIED IN PERMIT/CONTRACT DOCUMENTS.
9. APPROVED MAGNETIC TAPE IS REQUIRED FOR: ALL POTABLE WATER MAINS, FORCE MAINS AND RECLAIMED WATER MAINS. THE TAPE SHALL BE INSTALLED MAX. 24" BELOW FINISHED GRADE.
10. ROOT BARRIER IS REQUIRED FOR APPROVED TREE INSTALLATION CLOSER THAN 10 FEET FROM UTILITY FACILITIES.
11. CONTINUOUS 4" WIDE PAINT STRIPING IS REQUIRED FOR DIP/PCCP WATER MAINS (BLUE), DIP SEWER MAINS (GREEN), AND DIP RECLAIMED WATER MAINS (PURPLE).
12. PERMANENT ABOVE GROUND UTILITY MARKER SHALL BE INSTALLED IF REQUIRED BY PROPERTY OWNER GRANTING THE PIPE INSTALLATION PERMIT.
13. FOR PIPE INSTALLATIONS IN ROAD RIGHTS-OF-WAY, ROAD OWNER'S PERMIT SPECIFICATIONS SHALL APPLY.

TYPICAL TRENCH DETAIL/ ROOT BARRIER INSTALLATION DETAIL

14R

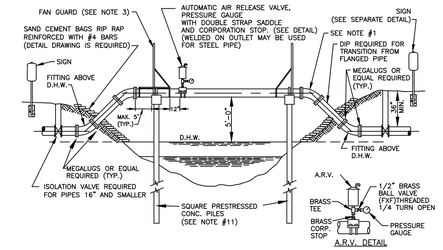

NOTES:

1. ALL EXPOSED PIPE SHALL BE DUCTILE IRON OR PREFABRICATED STEEL WITH FLANGED FITTINGS AND PROFILED GASKETS. RETAINER GLANDS AND UNIFLANGE TYPE FITTINGS ARE NOT TO BE SUBSTITUTED FOR FLANGED FITTINGS. PREFABRICATED FLANGED PIPE SHALL BE FACTORY TESTED. PREFABRICATED STEEL PIPE MAY INCORPORATE WELDED ON LONG RADIUS UPPER BENDS.
2. SPAN LENGTHS AS REQUIRED BY PERMITTING AGENCY
3. FAN GUARDS ARE REQUIRED. SEE FAN GUARD/PILE CAP DESIGN DETAILS, FOR ADDITIONAL REQUIREMENTS. ACCESS PLATFORM AND GATE REQUIRED ON ARV SIDE ONLY.
4A. ALL EXPOSED PIPING SHALL BE PAINTED AS SPECIFIED IN THE APPROVED MATERIAL LIST.
4B. ALL HARDWARE SHALL BE PAINTED WITH COAL-TAR EPOXY.
5. PIPE SHALL BE CRADLED ON ⅜" THICK NEOPRENE.(DUROMETER GRADE 50.) CURRENT FDOT STANDARDS APPLY. NEOPRENE IS REQUIRED AT ALL STRAPS INSTALLED OVER STEEL PIPE. NEOPRENE SHALL EXTEND MIN. 1" BEYOND THE EDGES OF THE CRADLE AND STRAPS.
6. TIE-DOWN STRAPS MUST PROPERLY FIT AND SECURE PIPE IN CRADLE.
7. PIPE CRADLE IN CAP SHALL CONTACT ⅓ CIRCUMFERENCE OF PIPE. (SEE FAN GUARD DETAIL)
8. SHOW EXISTING CANAL CROSS SECTION ULTIMATE CANAL SECTION AND RELEVANT ELEVATIONS AND DISTANCES ON A TO SCALE DETAIL DRAWING.
9. PILE LIFT CABLE SHALL BE REMOVED BELOW SURFACE; HOLE SHALL BE FILLED WITH EPOXY CEMENT.
10. THREADED AREAS OF BRASS FITTINGS SHALL BE SPIRAL WRAPPED WITH TWO WRAPS OF TEFLON TAPE.
11. THE PILES AND CAP DESIGN SHALL BE SHOWN ON TO SCALE SIGNED AND SEALED DETAIL DRAWINGS. MIN. 12"x12" TYPE 1A FLORIDA DOT INDEX PILES ARE REQUIRED. PILE PENETRATION BELOW CANAL BOTTOM SHALL BE 15' MINIMUM. MINIMUM LOAD CAPACITY OF 20 TONS PER PILE IS REQUIRED (FDOT STANDARDS APPLY). SIGNED AND SEALED SHOP DRAWINGS ARE REQUIRED.
12. RECLAIMED WATER SYSTEM PIPE SHALL BE PAINTED AS SPECIFIED IN THE APPROVED RECLAIMED WATER SYSTEM MATERIAL LIST.
13. PREFABRICATED STEEL PIPE SHALL HAVE WELDED ON BEARING PADS EXTENDING MIN. 1" BEYOND THE PIPE CRADLE. THE PADS SHALL BE INSTALLED BY THE STEEL PIPE MANUFACTURER PRIOR TO PAINTING.
14. RECLAIMED WATER MAIN CROSSINGS OVER BODIES OF WATER MAY BE SUBJECT TO A D.E.P. "NOTICED GENERAL ENVIRONMENTAL RESOURCE PERMIT" (NGP)

RECLAIMED WATER MAIN TYPICAL UTILITIES CANAL CROSSING – SINGLE PIPE (SINGLE PILES) *

15R

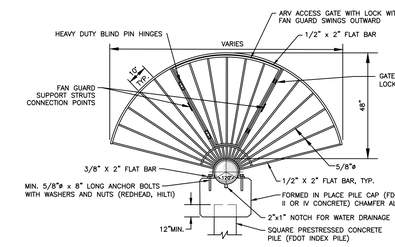

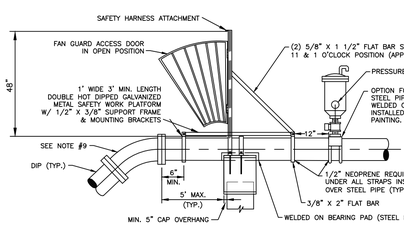

NOTES:

1. FAN GUARDS SHALL BE PLACED AT EACH END OF CANAL CROSSING.
2. HARDWARE SHALL BE PAINTED WITH COAL TAR EPOXY.
3. FANGUARD WITH HARDWARE SHALL BE FABRICATED FROM DOUBLE HOT DIPPED GALVANIZED STEEL.
4. SHOP DRAWINGS FOR FANGUARDS, CAPS, AND PILES MUST BE SUBMITTED TO PBCWUD FOR REVIEW AND APPROVAL PRIOR TO PRE-CONSTRUCTION MEETING.
5. REINFORCING STEEL SHALL CONFORM TO ASTM A-615, GRADE 60. MIN. 2" CONCRETE COVER OVER ALL STEEL.
6. SEE "TYPICAL CANAL CROSSING DETAIL" FOR ADDITIONAL REQUIREMENTS.
7. NO WELDING OF REBAR TO REBAR OR REBAR TO PILE STRANDS SHALL BE ALLOWED.
8. DESIGN DRAWINGS ARE REQUIRED.
9. LONG RADIUS WELDED ON UPPER BENDS ARE ACCEPTABLE FOR STEEL PIPE.
10. IF A PILE/CAP STEEL CONNECTION IS REQUIRED BY DESIGNING ENGINEER, MIN. (4) #8 REINFORCEMENT BARS SHALL BE DRILLED AND DOWELED (EPOXIED) MIN. 16" DEEP INTO THE PILE AND TIED WITH THE CAP STEEL.
11. ACCESS PLATFORM AND GATE REQUIRED ON ARV SIDE ONLY.

FAN GUARD/ PILE CAP DESIGN – SINGLE PIPE (SINGLE PILES)

16R

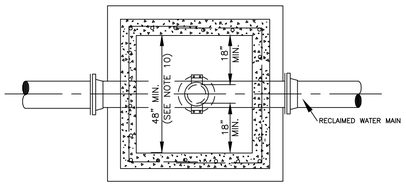

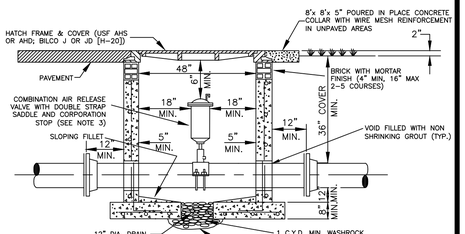

NOTES:

1. 4000 P.S.I. TYPE II CONCRETE
2. VAULT SHALL BE PRECAST WITH STEEL REINFORCING. SHOP DRAWING IS REQUIRED TO BE APPROVED BY THE DEPARTMENT PRIOR TO VAULT CONSTRUCTION AND/OR INSTALLATION.
3. COMBINATION AIR RELEASE VALVE (ARV) SHALL BE SIZED APPROPRIATE FOR SERVICE INTENDED ALTHOUGH A 2" MINIMUM SIZED ARV IS REQUIRED ON FORCE MAIN INSTALLATIONS.
4. ALL OPENINGS SHALL BE SEALED WITH WATERPROOF NON-SHRINKING GROUT.
5. ALTERNATE VAULT AND COVER DESIGN MAY BE USED PROVIDED ALTERNATE VAULT AND/OR COVER SHOP DRAWINGS WERE SUBMITTED AND APPROVED BY THE DEPARTMENT PRIOR TO THE VAULT AND/OR COVER BEING INSTALLED.
6. AIR RELEASE VALVE AND PIPING TO BE IDENTIFIED AS "RECLAIMED WATER".
7. DUCTILE IRON PIPE IS REQUIRED THROUGH THE VAULT. NO PIPE JOINTS ARE ALLOWED IN VAULT.
8. THREADED AREAS OF CORPORATION STOP SHALL BE COMPLETELY SPIRAL WRAPPED WITH TWO WRAPS OF TEFLON TAPE.
9. LARGER VAULTS WILL BE REQUIRED FOR PIPES LARGER THAN 12"

PIPE SIZE	MIN. VAULT SIZE
16"-24"	4'x5'
30"-42"	4'x6'

RECLAIMED WATER MAIN UNDERGROUND AIR RELEASE VALVE AND VAULT IN NON-TRAFFIC AREAS OUTSIDE OF ROAD R/W *

17R

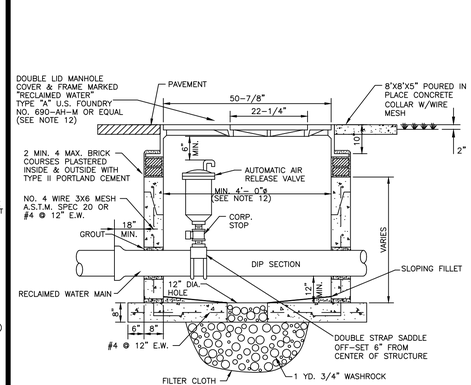

NOTES:

1. PRECAST CONCRETE TYPE # 4000 P.S.I. A SHOP DRAWING IS REQUIRED
2. ALL OPENINGS SHALL BE SEALED WITH A WATERPROOF NON-SHRINKING GROUT.
3. LIFT HOLES ARE PERMITTED.
4. ALL PIPE HOLES SHALL BE PRECAST OR CORE-DRILLED.
5. MANHOLE FABRICATION SHALL BE IN ACCORDANCE WITH A.S.T.M. C-478 LATEST STANDARD.
6. CONCRETE COLLAR REQUIRED WHEN MANHOLE IS OUTSIDE PAVEMENT.
7. AIR RELEASE VALVE SHALL BE TYPE AND SIZE APPROPRIATE FOR SERVICE INTENDED.
8. AIR RELEASE VALVE AND PIPING TO BE IDENTIFIED AS "RECLAIMED WATER".
9. DUCTILE IRON PIPE IS REQUIRED THROUGH THE MANHOLE. NO PIPE JOINTS ARE ALLOWED IN MANHOLE.
10. THREADED AREAS OF CORPORATION STOP SHALL BE COMPLETELY SPIRAL WRAPPED WITH TWO WRAPS OF TEFLON TAPE.
11. FOR PIPES 12" AND SMALLER, AN ALTERNATIVE DESIGN WITH APPROVED 32" DIAMETER HINGED MANHOLE COVERS WILL BE CONSIDERED.
12. LARGER MANHOLES WILL BE REQUIRED FOR PIPES LARGER THAN 12"

PIPE SIZE	MIN. MANHOLE DIAMETER
16"-24"	60"
30"-42"	72"

13. MANHOLES IN ROADWAYS SHALL BE LOCATED OUTSIDE OF WHEEL PATHS.

RECLAIMED WATER MAIN AIR RELEASE VALVE AND MANHOLE IN PAVED AREAS AND IN ROAD R/W *

18R

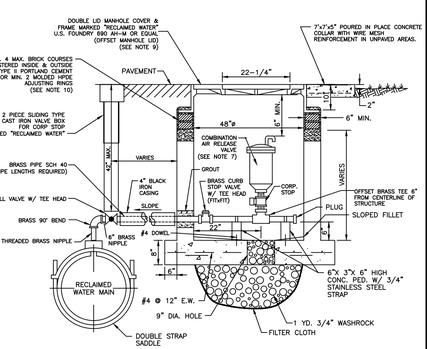

NOTES:

1. PRECAST MONOLITHIC POURED 4,000 P.S.I. TYPE II CONCRETE STRUCTURE. SHOP DRAWING IS REQUIRED TO BE APPROVED BY THE DEPARTMENT PRIOR TO VAULT CONSTRUCTION AND/OR INSTALLATION.
2. ALL OPENINGS SHALL BE SEALED WITH A WATERPROOF NON-SHRINKING GROUT.
3. ALL PIPE HOLES SHALL BE PRECAST.
4. PIPING AND STRUCTURE TO BE IDENTIFIED AS "RECLAIMED WATER SYSTEM" COMPONENTS.
5. THREADED AREAS OF CORPORATION STOP AND OTHER FITTINGS SHALL BE SPIRAL WRAPPED WITH TWO WRAPS OF TEFLON TAPE.
6. COMBINATION AIR RELEASE VALVE (ARV) SHALL BE SIZED APPROPRIATE FOR SERVICE INTENDED ALTHOUGH A 1" MINIMUM SIZED ARV IS REQUIRED ON RECLAIMED WATER MAIN INSTALLATIONS.
7. CONCRETE COLLAR REQUIRED IN UNPAVED AREAS AND WHEN PAVEMENT IS TO BE INSTALLED IN FUTURE.
8. ALTERNATE VAULT DESIGN MAY BE USED WITH AN APPROVED 32" DIAMETER HINGED MANHOLE COVER IS USED PROVIDED AN ALTERNATE VAULT SHOP DRAWING WAS SUBMITTED AND APPROVED BY THE DEPARTMENT PRIOR TO THE VAULT AND COVER BEING INSTALLED.
9. IN LIEU OF BRICK WORK APPROVED PRECAST CONCRETE ADJUSTING RINGS MAY BE USED WITH INSTALLATION BY MANUFACTURER'S RECOMMENDATION.
10. PIPE AND FITTINGS SHALL BE STANDARD BRASS.
11. MANHOLE SHALL BE INSTALLED OUTSIDE OF TRAFFIC AREA

RECLAIMED WATER MAIN OFF-SET UNDERGROUND AIR RELEASE VALVE *

20R

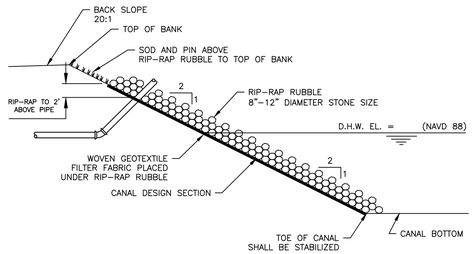

NOTES:

1. RIP-RAP RUBBLE AND ITS INSTALLATION MUST MEET CANAL OWNERSHIP SPECIFICATIONS AND PERMITTING REQUIREMENTS.
2. DUMP RUBBLE IN PLACE FORMING A COMPACT LAYER CONFORMING TO THE CANAL DESIGN SECTION SLOPE. ENSURE THAT RUBBLE DOES NOT SEGREGATE SO THAT SMALLER PIECES EVENLY FILL THE VOIDS BETWEEN LAGER PIECES.
3. AN ALTERNATIVE DESIGN WILL BE CONSIDERED AND MUST RECEIVE PRIOR APPROVAL FROM THE CANAL PROPERTY OWNER.

RIP-RAP RUBBLE DETAIL *

31R

RECLAIMED WATER #2 STANDARD DETAILS

CONSULTANT:

IT'S THE LAW ! CALL 48 HOURS BEFORE YOU DIG 1-800-432-4770 SUNSHINE STATE ONE CALL OF FLORIDA, INC. UTILITIES NOTIFICATION CENTER

DESIGNED BY: WUD
DRAWN BY: M. BUCKNER
CHECKED BY: J. LAMMERT
APPROVED BY: WUD

Palm Beach County
Water Utilities Department
P.O.Box 16097
West Palm Beach, FL 33416-6097

PROJECT NO. 00-000

PROJECT NAME

PALM BEACH COUNTY
WATER UTILITIES DEPARTMENT
P.O. BOX 16097
WEST PALM BEACH, FL 33416
(561)493-6000

NO.	DATE	*	REVISION / REMARKS	BY
	JUN 2019		GENERAL REVISION	J.L.

STD DETAILS

SHEET NUMBER 0 OF 0

SEAL

Jul 30, 2019